| | |
|---|---|
| | **Bitte beachten, dass solche Elektrogeräte nur vom Fachmann angeschlossen werden dürfen!** |

**Bauschaltplan**

Die Bauschaltpläne dienen nur als Informationsmaterial. Der Benutzer sollte einen geeigneten Bauschaltplan auswählen. Folgende elektrische Eigenschaften können unterschieden werden:

- Phasen;
- Frequenz:
- Einsitzige oder zweistellige elektrische Spannung

| 3P 220V/380V | 3P 220V/440V | 3P 230V/460V |
|---|---|---|
| 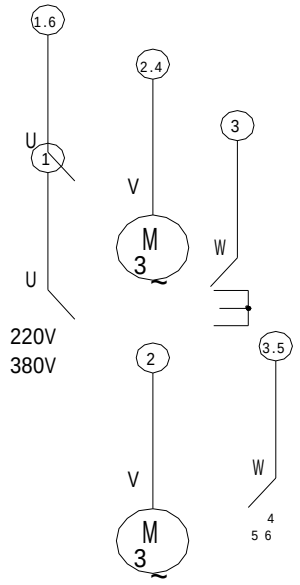 | 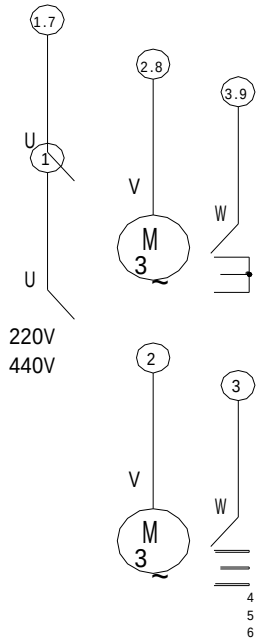 | 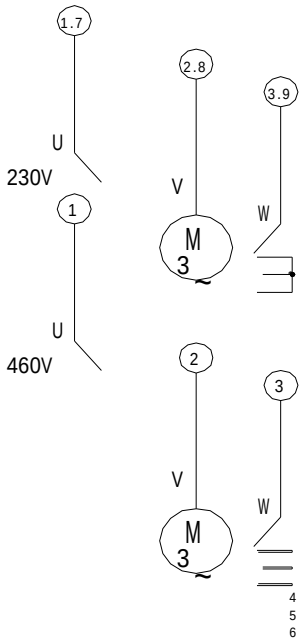 |







**Übersetzung von Bezeichnungen**

| English | Deutsch |
|---|---|
| Control switch | Steuerschalter |
| Limit switch | Endschalter |
| Transformer | Transformator |
| Capacitance | Kapazität |
| E.stop | E-halt |
| Start | Start |
| Up | Nach oben |
| Down | Nach unten |
| Up slow | Nach oben langsam |
| Up fast | Nach oben schnell |
| Down fast | Nach unten langsam |
| Down slow | Nach unten schnell |
| Left | Nach links |
| Right | Nach rechts |
| Forward | Vorwärts |
| Backward | Rückwärts |
| Red | Rot |
| White | Weiß |
| Black | Schwarz |
| RD6: reverse protector | RD6: Rückwärtsschutz |
| U1/V1/W1: wire of slow motor | U1/V1/W1: Kabel des langsamen Motors |
| U2/V2/W2: wire of fast motor | U2/V2/W2: Kabel des schnellen Motors |
| Interface of trolley low voltage control wire | Schnittstelle des Niederspannungs-Kabels der Laufkatze |

**Inhalt**

Seite 21..... Elektrokettenzug HHBD Einzelgeschwindigkeit

Seite 22..... Elektrokettenzug HHBD-T mit Laufkatze, Einzelgeschwindigkeit

Seite 24..... Elektrokettenzug HHBD doppelte Geschwindigkeit

Seite 25..... Elektrokettenzug HHBD-T mit Laufkatze, doppelte Geschwindigkeit

Seite 27..... Elektrokettenzug HHBD Einzelgeschwindigkeit, mit Not-Aus-Taster

Seite 28..... Elektrokettenzug HHBD-T mit Laufkatze, Einzelgeschwindigkeit, mit Not-Aus-Taster

Seite 30..... Elektrokettenzug HHBD doppelte Geschwindigkeit, mit Not-Aus-Taster

Seite 31..... Elektrokettenzug HHBD-T mit Laufkatze, doppelte Geschwindigkeit, mit Not-Aus-Taster

# 7. Troubleshooting

## 7.1 Wiring Diagram


(1) 2:00 Single Speed ---------- 21
(2) 4:00 Single Speed ---------- 22
(3) 6:00 Single Speed ---------- 23
(4) 2:00 Single Speed ---------- 24
(5) 4:00 Single Speed ---------- 25
(6) 6:00 Single Speed ---------- 26
(7) 2:00 dual speed ---------- 27
(8) 4:00 dual speed ---------- 28
(9) 4:00 dual speed ---------- 29
(10) 2:00 dual speed ---------- 30
(11) 4:00 dual speed ---------- 30
(12) 2-6-point single-speed automatic commutation control of electrical ---------- 32


Pictured above is only for reference line
Users should be inside the circuit diagram electrical enclosure shall prevail.

Electrical specifications set out to follow the following:

(A) three-phase

(B) the frequency range of 50Hz or 60Hz power supply

(C) single-voltage or dual voltage

| Voltage / Hertz | Dual Voltage | Single Voltage |
|---|---|---|
| 50Hz | 220V/380V<br>220V/440V<br>230V/460V | 220~600V |
| 60Hz | | |





# Single Speed 2:00 fixed electrical wiring diagram

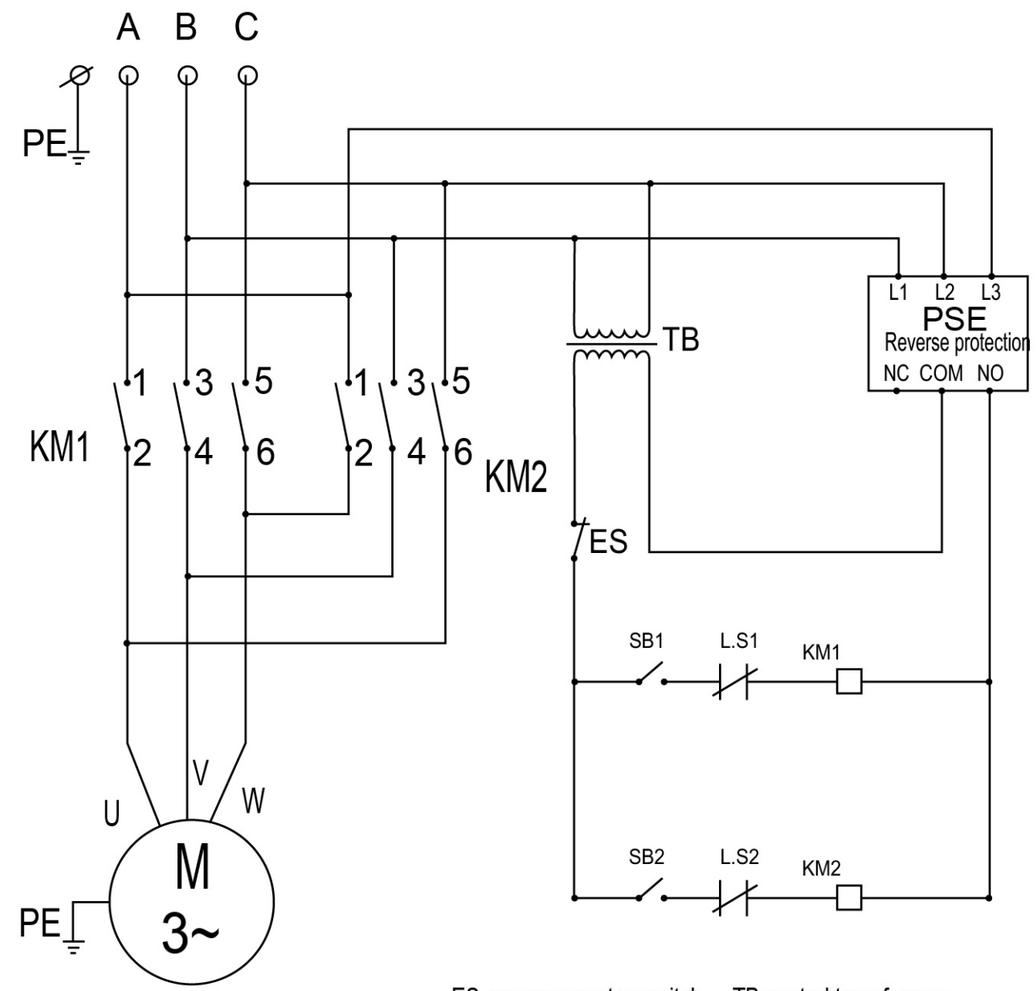


ES emergency stop switch
SB1 on the control point
SB2 under the control point
LS1 upper limit
LS2 lower limit

TB control transformer
PSE phasing
AC contactor KM1-KM2
PE Ground

# 4:00 run single speed style electrical wiring diagram

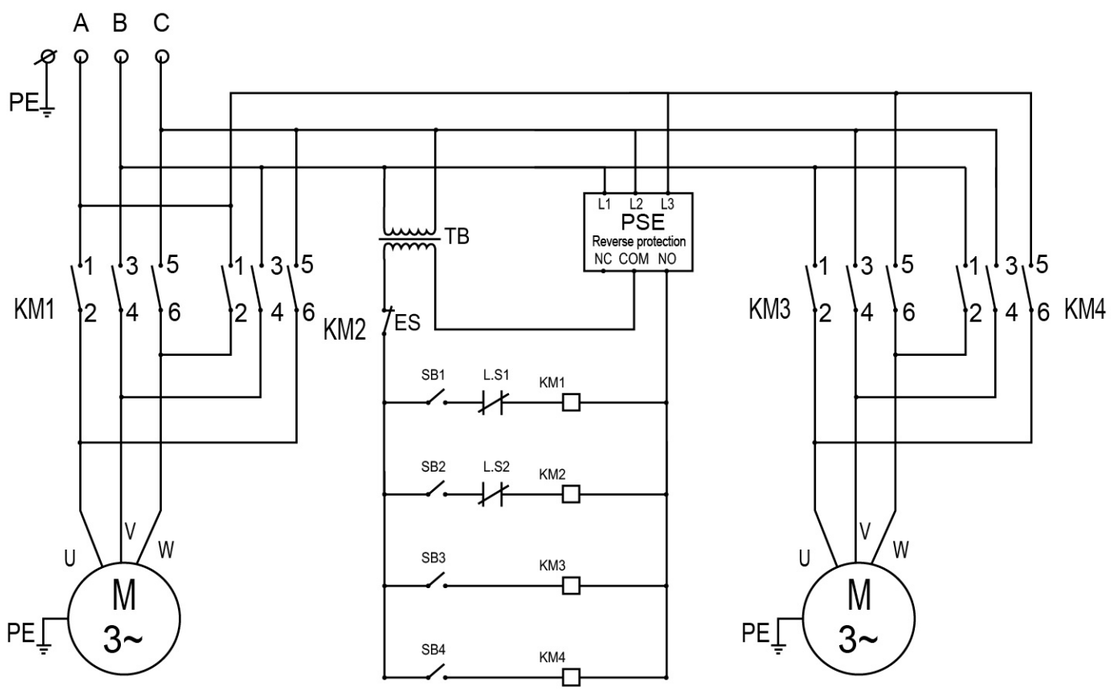


| | |
|---|---|
| ES emergency stop switch | LS1 upper limit |
| SB1 on the control point | LS2 lower limit |
| SB2 under the control point | TB control transformer |
| SB3 left control point | PSE phasing |
| SB4 right control point | AC contactor KM1-KM4 |
| | PE Ground |





# 6:00 run single speed style electrical wiring diagram

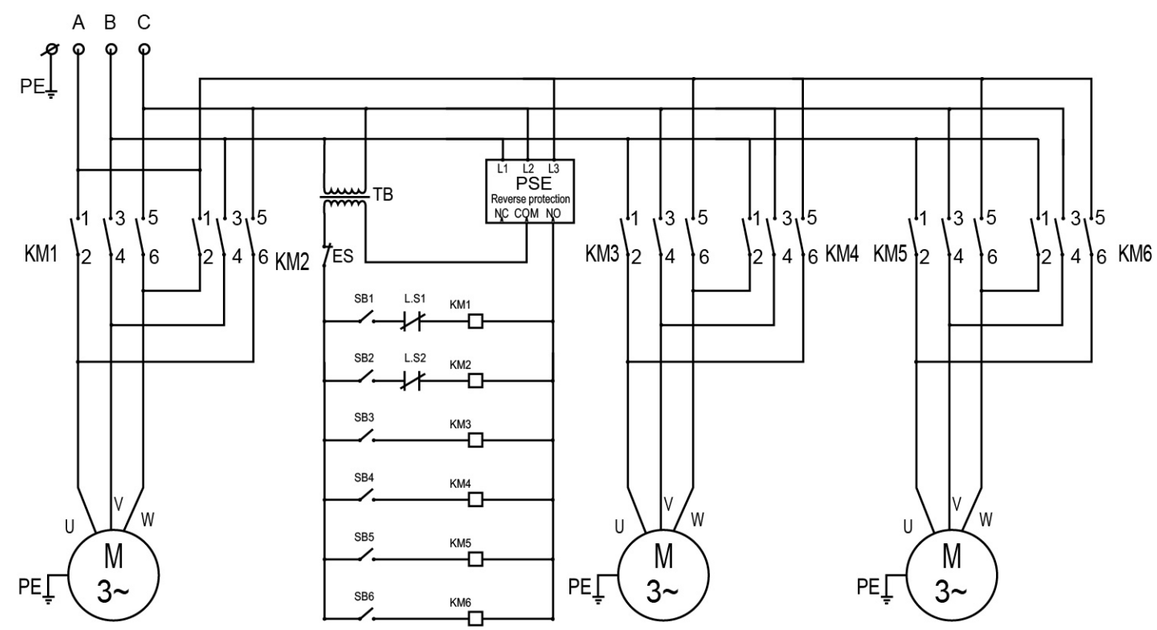


| | |
|---|---|
| ES emergency stop switch | LS1 upper limit |
| SB1 on the control point | LS2 lower limit |
| SB2 under the control point | TB control transformer |
| SB3 left control point | PSE phasing |
| SB4 right control point | AC contactor KM1-KM6 |
| SB5 front handles | PE Ground |
| SB6 after the control point | |

# 2:00 two-speed control (4 contacts)

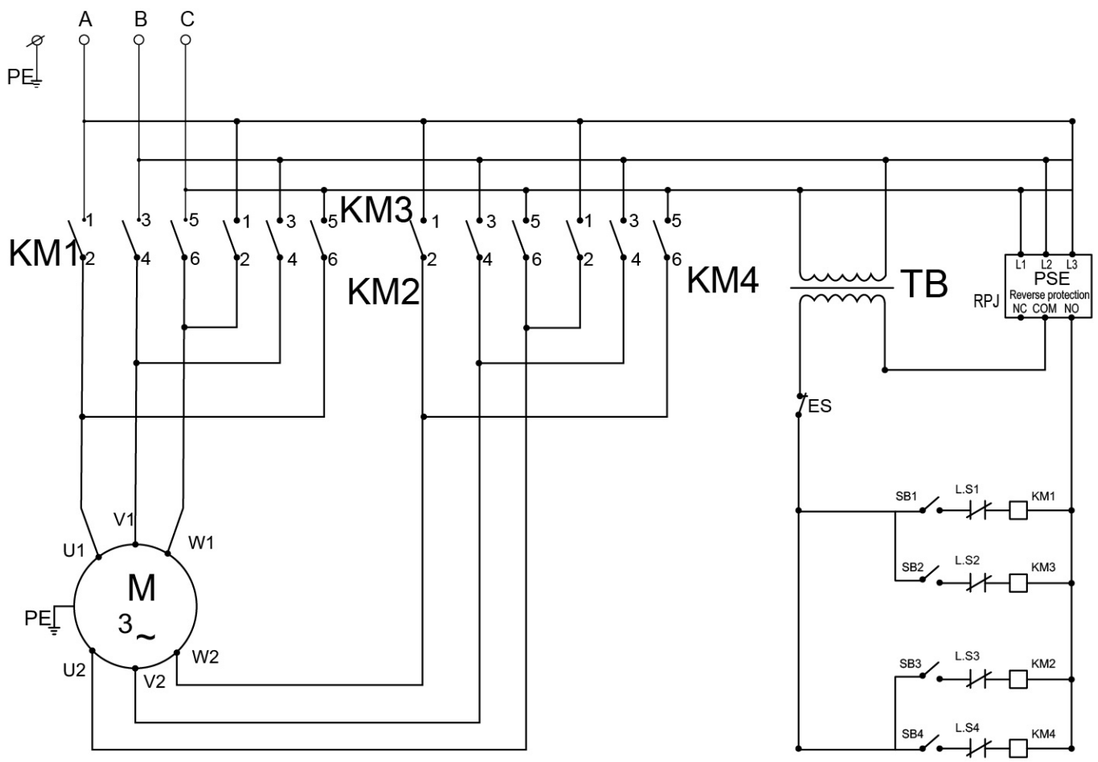


ES emergency stop switch
SB1 slower control point
SB2 faster control point
SB3 slow down the control point
SB4 quickly under control points
LS1 slow upper limit
LS2 fast upper limit
LS3 slowly lower limit
LS4 fast lower limit
TB control transformer
PSE phasing
AC contactor KM1-KM4
PE Ground





# 4:00 two-speed control (4 contacts)

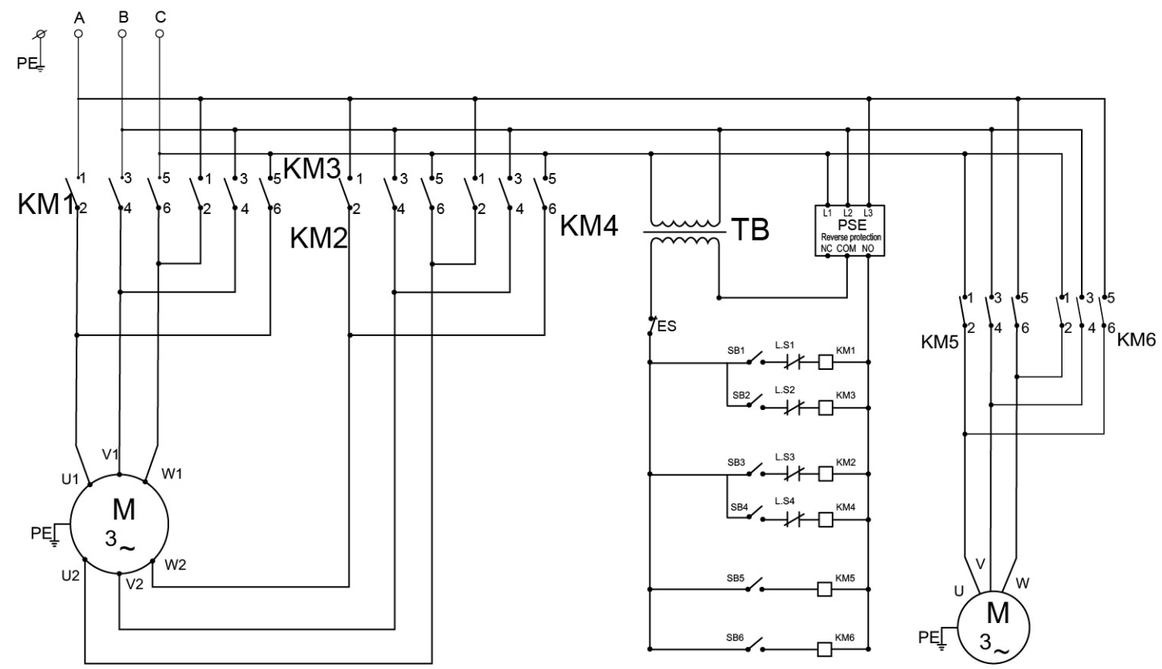


ES emergency stop switch
SB1 slower control point
SB2 faster control point
SB3 slow down the control point
SB4 quickly under control points
SB5 left control point
SB6 right control point
LS1 slow upper limit
LS2 fast upper limit
LS3 slowly lower limit
LS4 fast lower limit
TB control transformer
PSE phasing
AC contactor KM1-KM8
PE Ground

# 6:00 two-speed control (4 contacts)

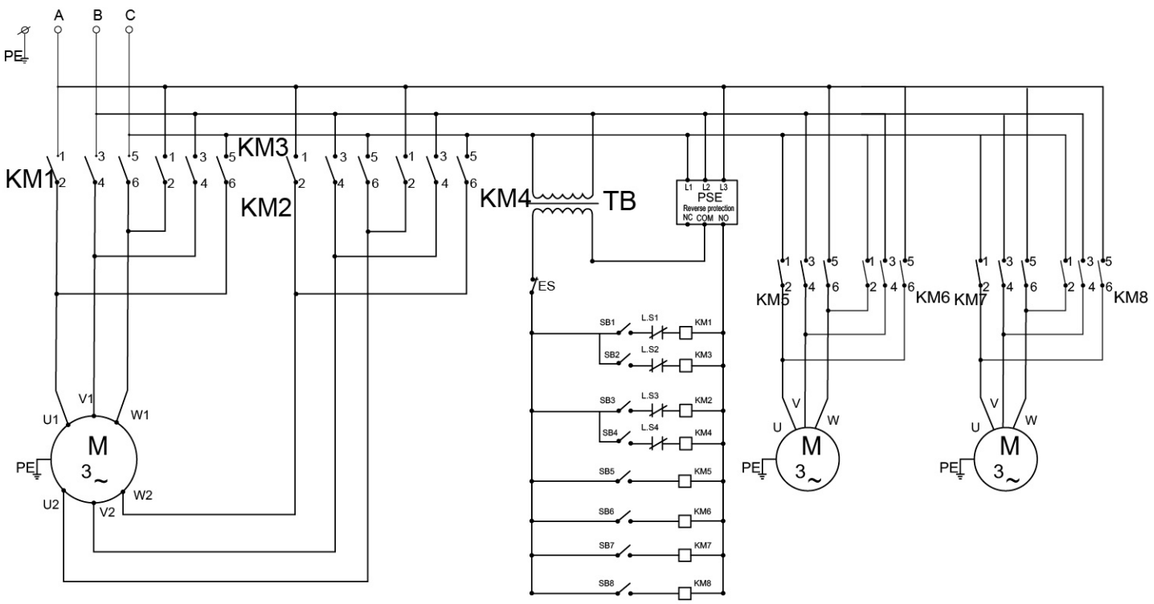


| | |
|---|---|
| ES emergency stop switch | LS1 slow upper limit |
| SB1 slower control point | LS2 fast upper limit |
| SB2 faster control point | LS3 slowly lower limit |
| SB3 slow down the control point | LS4 fast lower limit |
| SB4 quickly under control points | TB control transformer |
| SB5 left control point | PSE phasing |
| SB6 right control point | AC contactor KM1-KM8 |
| SB7 front handles | PE Ground |
| SB8 after the control point | |





# Start with a single-speed 2:00

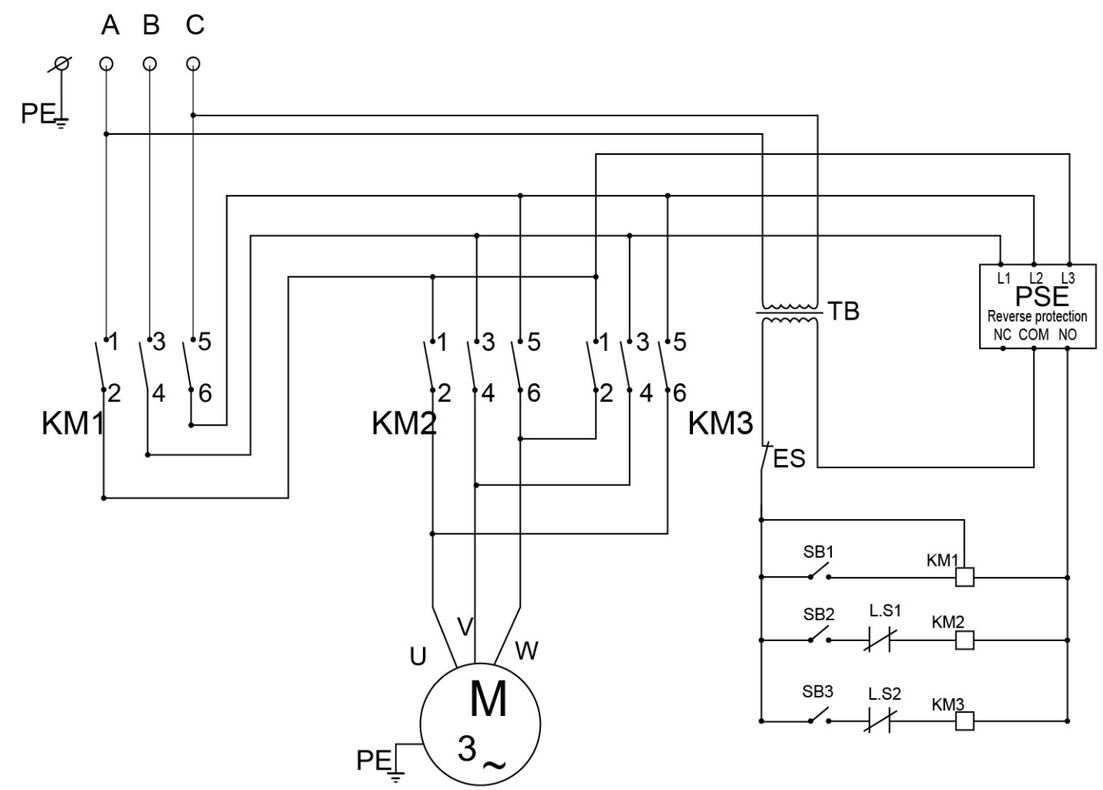


| | |
|---|---|
| ES emergency stop switch | LS1 upper limit |
| SB1 mains contactor | LS2 upper limit |
| SB2 on the control point | TB control transformer |
| SB3 under the control point | PSE phasing |
| | AC contactor KM1-KM3 |
| | PE Ground |

# Single speed 4:00 with start

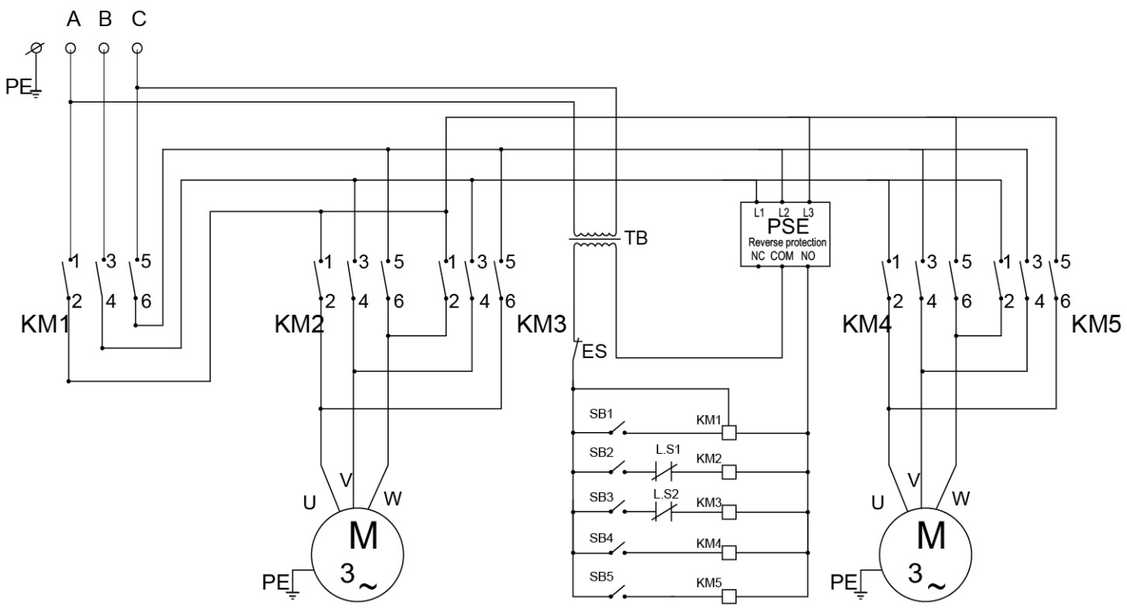


| | |
|---|---|
| ES emergency stop switch | LS1 upper limit |
| SB1 mains contactor | LS2 lower limit |
| SB2 on the control point | TB control transformer |
| SB3 under the control point | PSE phasing |
| SB4 left control point | AC contactor KM1-KM5 |
| SB5 right control point | PE Ground |





# Single speed 6:00 with start

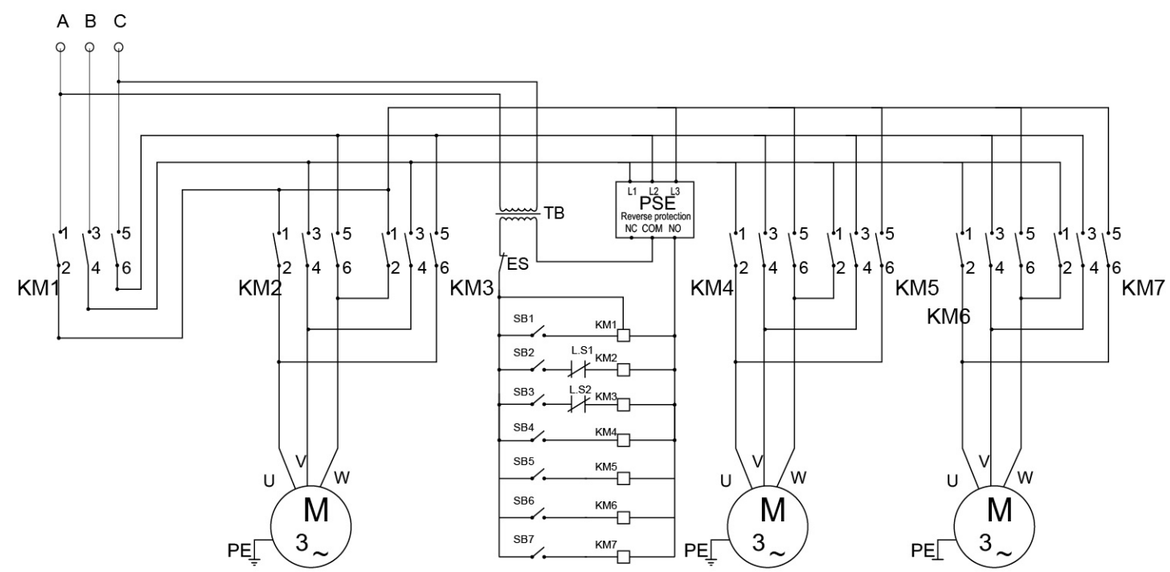


| | |
|---|---|
| ES emergency stop switch | LS1 upper limit |
| SB1 mains contactor | LS2 lower limit |
| SB2 on the control point | TB control transformer |
| SB3 under the control point | PSE phasing |
| SB4 left control point | AC contactor KM1-KM7 |
| SB5 right control point | PE Ground |
| SB6 front handles | |
| After the control point SB7 | |

# Start with a two-speed 2:00 (A3)

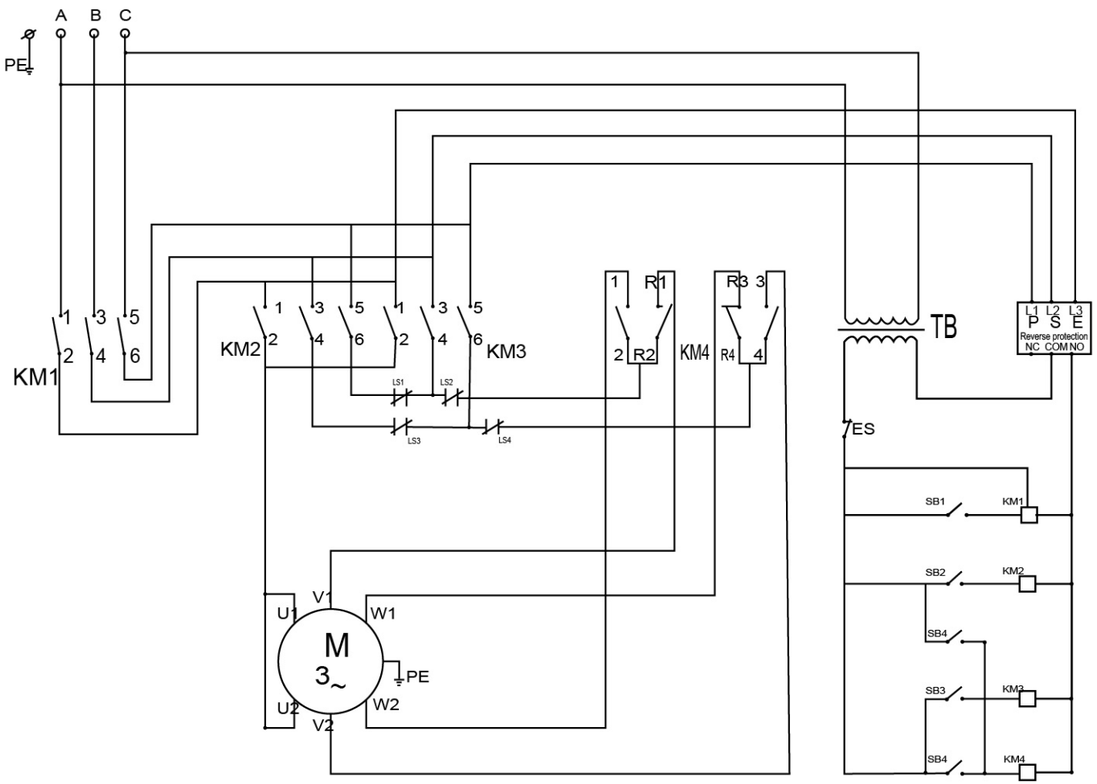


ES emergency stop switch
SB1 mains contactor
SB2 slower control point
SB3 slow down the control point
SB4 rapid control point

LS 1. LS 3 upper limit
LS 2. LS 4 lower limit
TB control transformer
PSE phasing
AC contactor KM1-KM4
PE Ground





# Start with a two-speed 4:00 (A3)

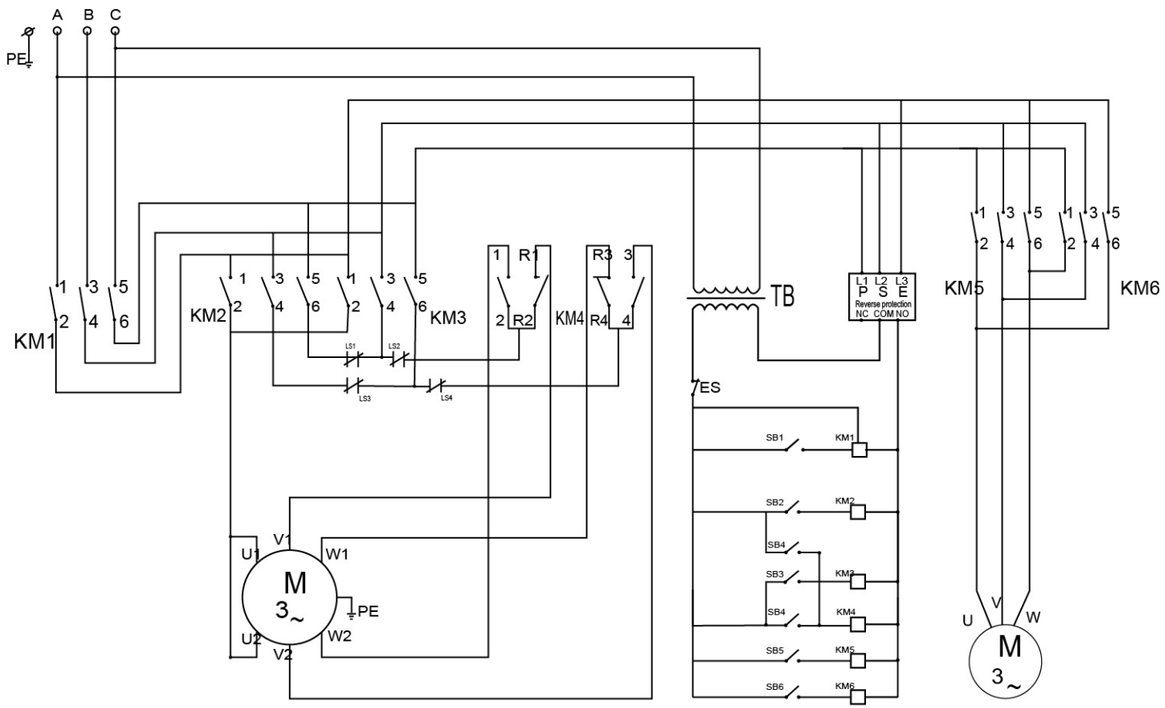


ES emergency stop switch
SB1 mains contactor
SB2 slower control point
SB3 slow down the control point
SB4 rapid control point
SB5 left control point
SB6 right control point

LS 1. LS 3 upper limit
LS 2. LS 4 lower limit
TB control transformer
PSE phasing
AC contactor KM1-KM6
PE Ground

# Single-speed automatic commutation control points 2-6 electrical schematics

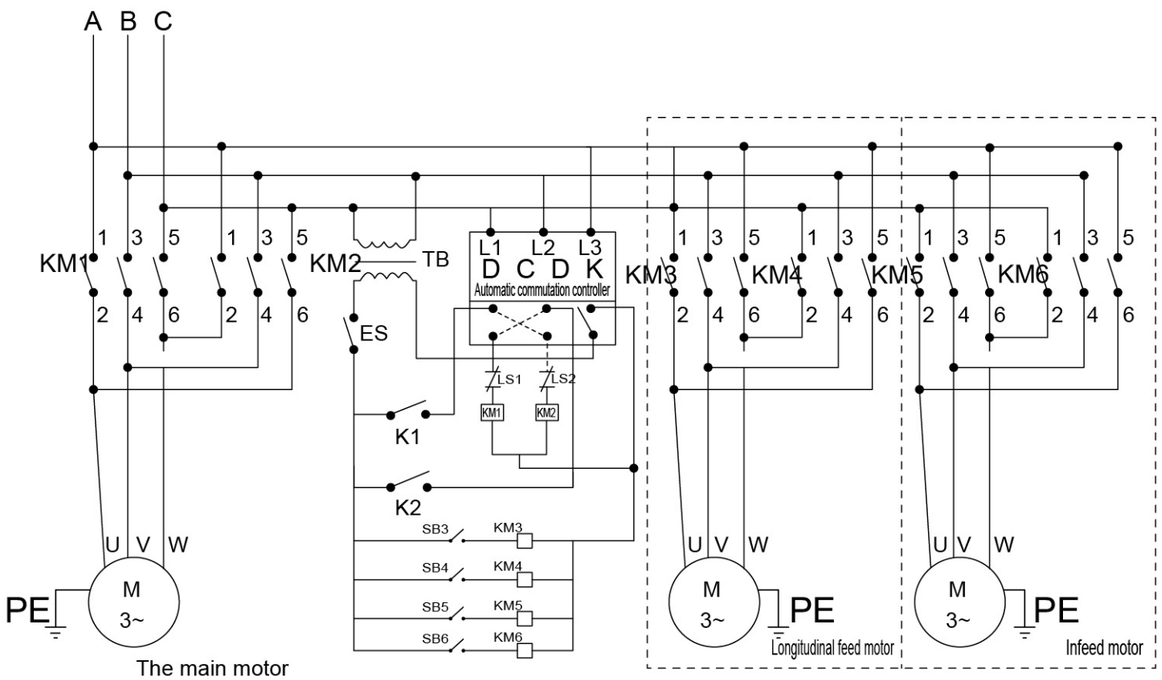


| | |
|---|---|
| ES emergency stop switch | LS 1 upper limit |
| K1 on the control point | LS 2 lower limit |
| K2 under the control point | TB control transformer |
| SB3 left control point | PASE automatic phase controller |
| SB4 right control point | AC contactor KM1-KM6 |
| SB5 front handles | PE Ground |
| SB6 after the control point | |





## 8. Drawing and parts list


Ⅶ-1 Motor and body assembly drawing ---- 31
Ⅶ-1 Motor and body parts list ---- 32
Ⅶ-2A Hook assembly drawing (0.5,1,1.5,2,2.5,3,5ton) ---- 33
Ⅶ-2A Hook parts list(0.5,1,1.5,2,2.5,3,5ton) ---- 34
Ⅶ-2B Hook assembly drawing(7.5ton) ---- 35
Ⅶ-2B Hook assembly parts list(7.5ton) ---- 36
Ⅶ-3 Gear box assembly drawing ---- 37
Ⅶ-3 Gear box assembly parts list ---- 38
Ⅶ-4 Chain assembly drawing ---- 39
Ⅶ-4 Chain assembly parts list ---- 40
Ⅶ-5 Gear box assembly drawing ---- 41
Ⅶ-5 Gear box assembly parts list ---- 42
Ⅶ-7 Electric trolley assembly drawing ---- 43
Ⅶ-7 Electric trolley assembly parts list ---- 44
Ⅶ-8 Handle trolley assembly drawing ---- 45
Ⅶ-8 Handle trolley assembly parts list ---- 45